(b) Apply lithium soap base glycol grease to the 2 grommets and install them to the master cylinder body.
(c) Install the reservoir sub-assembly with the stopper screw.

INSTALLATION

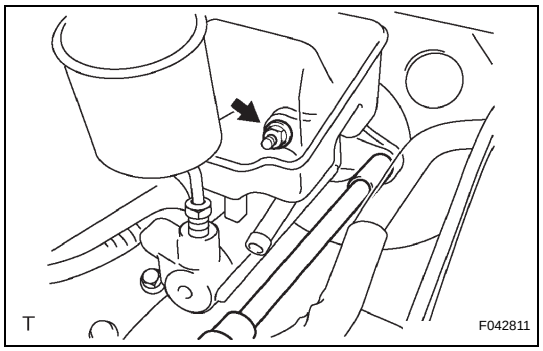

1. INSTALL BRAKE MASTER CYLINDER SUB-ASSEMBLY

(a) Install the master cylinder sub-assembly and No. 1 way, and check the valve bracket with the 2 nuts.
Torque: 12.5 N*m (127 kgf*cm, 9 ft.*lbf)

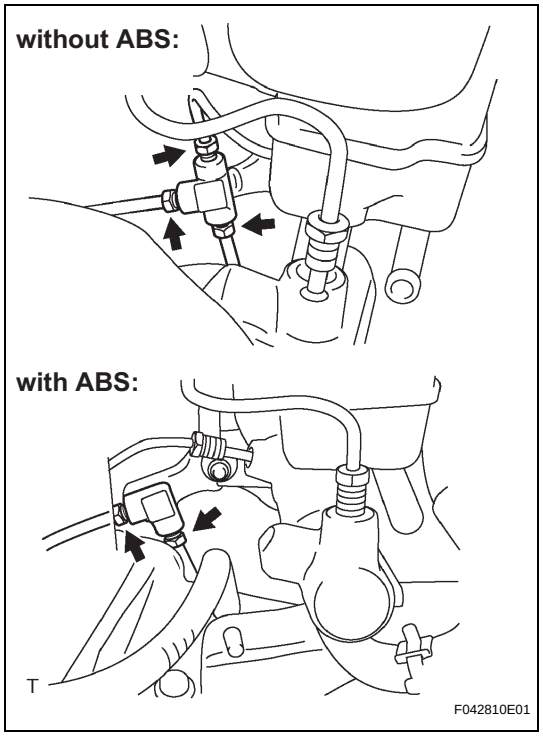

(b) Using SST, connect the 2 or 3 brake tubes to the No. 1 way.
SST 09023-00101
Torque: 15 N*m (155 kgf*cm, 11 ft.*lbf)

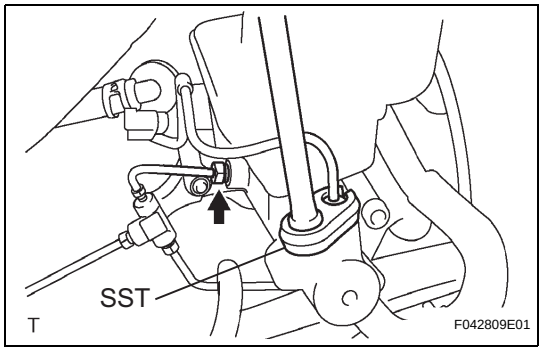

(c) Using SST, connect the 2 brake tubes to the master cylinder sub-assembly.
SST 09023-00101
Torque: 15 N*m (155 kgf*cm, 11 ft.*lbf)
(d) M/T:
Connect the clutch reservoir tube No. 1 with the clip to the master cylinder reservoir sub-assembly.
(e) Connect the brake fluid level switch connector to the master cylinder reservoir sub-assembly.

2. INSTALL AIR CLEANER CAP SUB-ASSEMBLY

3. FILL RESERVOIR WITH BRAKE FLUID

(a) Fill the reservoir with brake fluid (See page BR-3).

4. BLEED MASTER CYLINDER

(a) Bleed the master cylinder (See page BR-3).
SST 09023-00101

5. **BLEED BRAKE LINE**
   (a) Bleed the brake line (See page BR-3).
6. **CHECK BRAKE FLUID LEVEL IN RESERVOIR**
   (a) Check the brake fluid level in reservoir (See page BR-3).
7. **INSPECT FOR BRAKE FLUID LEAK**